FUEL SYSTEM

TABLE OF CONTENTS

FUEL LINES

Removal and Installation

Pay special attention to the following when removing or installing fuel hoses:

- Do not over bend, kink, or twist hoses during installation.
- When installing hose clamps or clips, position the tabs to avoid contact with other parts.
- Make sure hoses do not contact rods, levers, or other moving parts.
- Take care not to cut, abrade, or cause any other damage to hoses.
- Take care not to excessively compress hoses when tightening clamps.

Checking for Fuel Leakage

WARNING

After servicing the fuel system, check for leaks. Failure to check for fuel leakage could allow a leak to go undetected, resulting in fire or explosion.

Squeeze the fuel primer bulb until resistance is felt.

Once pressurized, check all connections and components for any signs of leakage.

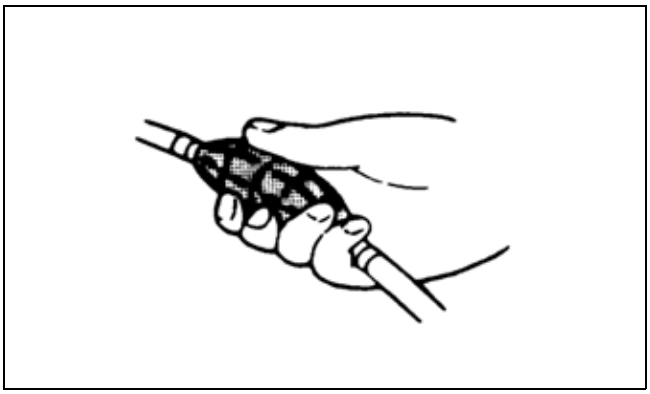

001608

Fuel Hose Connections

Note that fuel hose connections vary according to each type of pipe. Connect each hose correctly by referring to the following figure.

Install the hose clamp 0.1 to 0.3 in. (3 to 7 mm) from the end of the hose.

- For type “A” (short barbed end) pipe, the hose must completely cover the pipe.
- For type “B” (bent end) pipe, the hose must cover the straight part of the pipe by 0.8 to 1.2 in. (20 to 30 mm).
- For type “C” pipe, the hose must fit up against the flanged part of the pipe.
- For type “D” pipe, the hose must cover the pipe by 0.8 to 1.2 in. (20 to 30 mm).

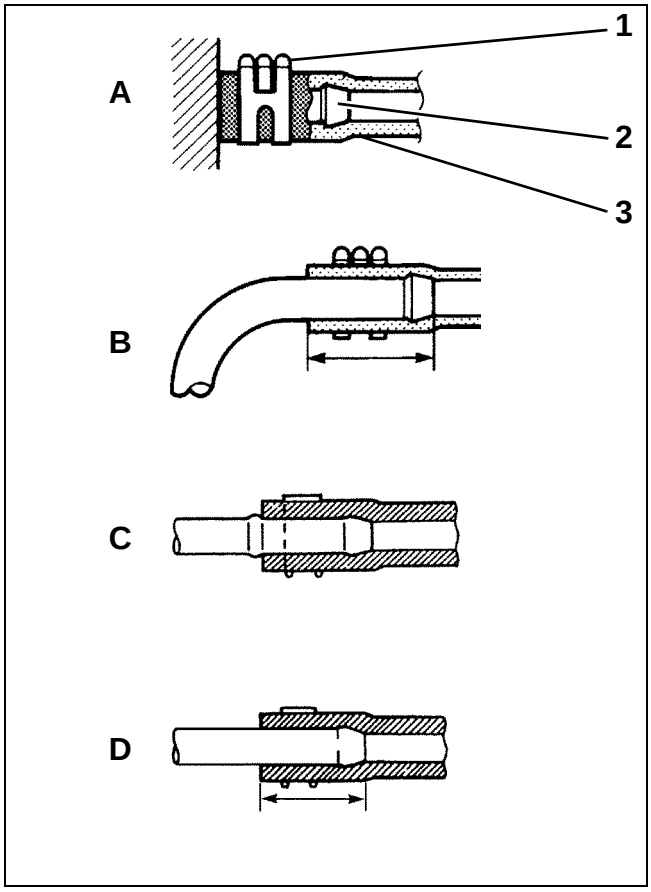

001609

1. *Clamp*
2. *Pipe joint*
3. *Hose*

CARBURETORS

Removal

Remove three (3) bolts and the flywheel cover.

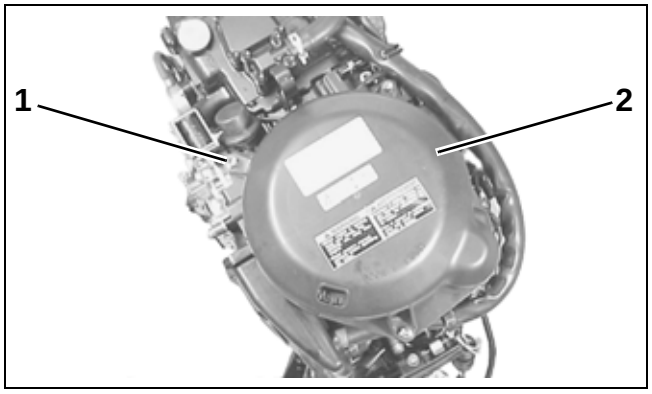

1. Bolts (3)
2. Flywheel cover
001394

Remove four (4) bolts and the starboard side cover.

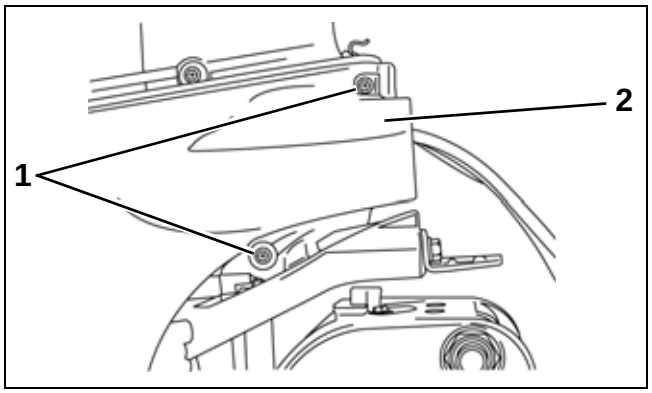

1. Screws (2)
2. Starboard side lower cover
001723

Remove two (2) bolts that secure the silencer case.

Remove two (2) bolts that secure the air silencer pipe to the crankcase.

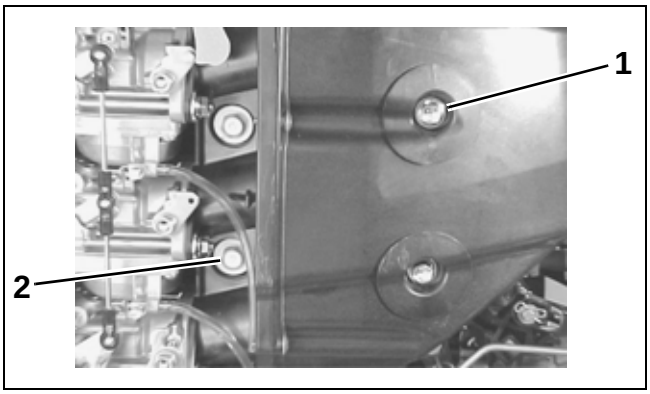

1. Air silencer case bolts (2)
2. Air silencer pipe bolts (2)
001610

Tiller handle models only: Remove the E-ring and the choke rod from the bottom carburetor.

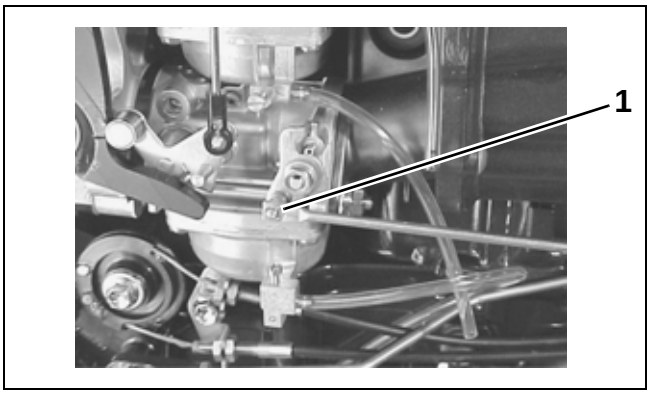

1. Choke rod
001611

Remove the throttle control rod from the throttle cam.

Remove the bolt, the fuel filter bracket, and the fuel filter.

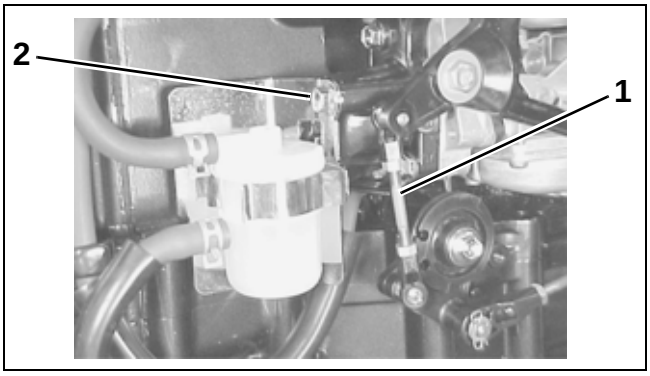

1. Throttle control rod 001612
2. Fuel filter bracket bolt

Remove the fuel pump. Refer to “FUEL PUMP” on page 111.

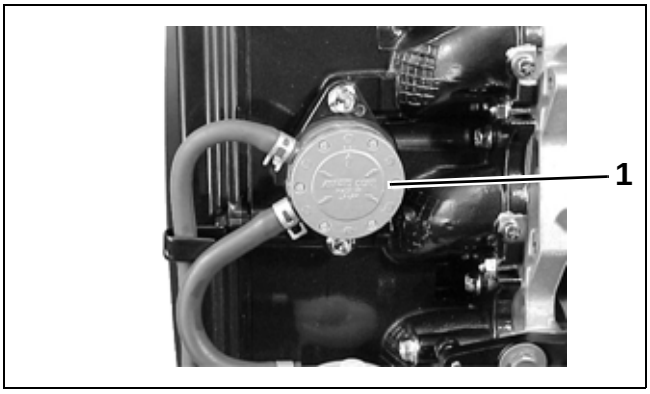

1. Fuel pump 001635

Remove four (4) bolts and two (2) nuts that secure the inlet case to the intake manifold.

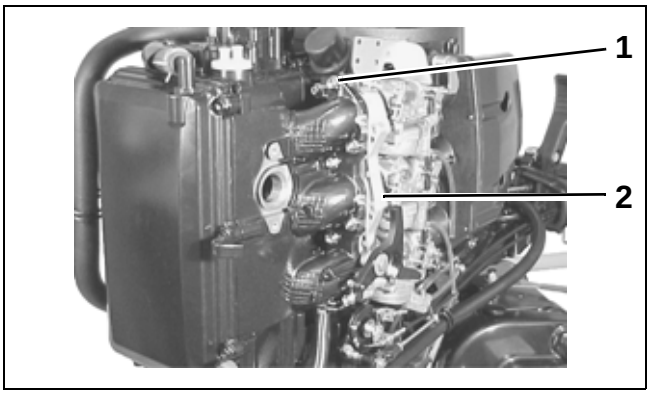

1. Bolts (4) 001613
2. Inlet case

Remove the carburetor/inlet case assembly, then remove the fuel inlet hose from the bottom 3-way joint.

Remove four (4) screws and the air silencer case.

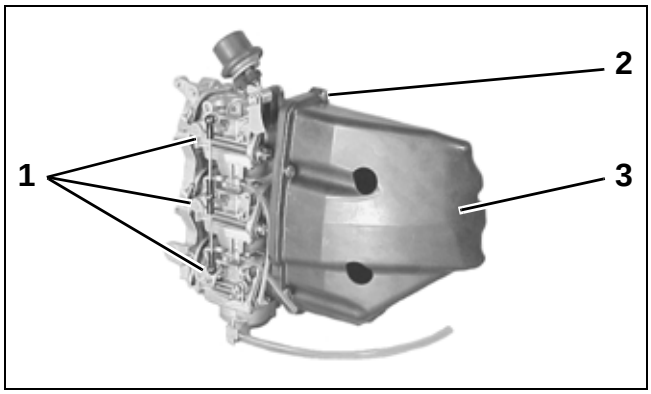

1. Carburetors (3) 001614
2. Screws (4)
3. Air silencer case

Remove the choke rods and the throttle link rods from each carburetor.

Remove the bolts and the choke solenoid (TEL models only) or the carburetor protector (tiller handle model only).

Loosen the carburetor flange nuts, then remove the nuts.

Remove the plates, the air silencer pipe, the carburetors, the insulators, and the gaskets from the inlet case. Discard the carburetor gaskets.

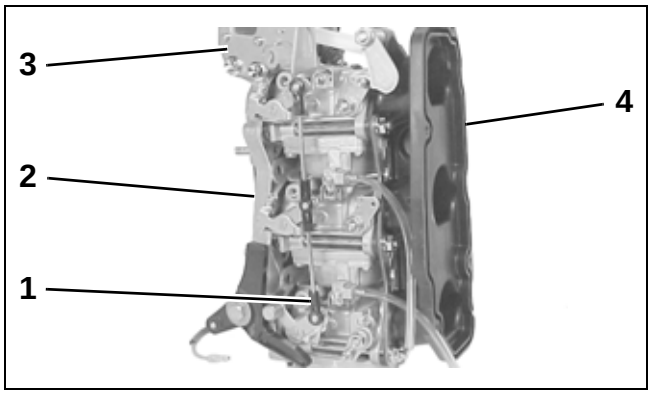

1. *Throttle link rod* 001615
2. *Inlet case*
3. *Choke solenoid or carburetor protector*
4. *Air silencer pipe*

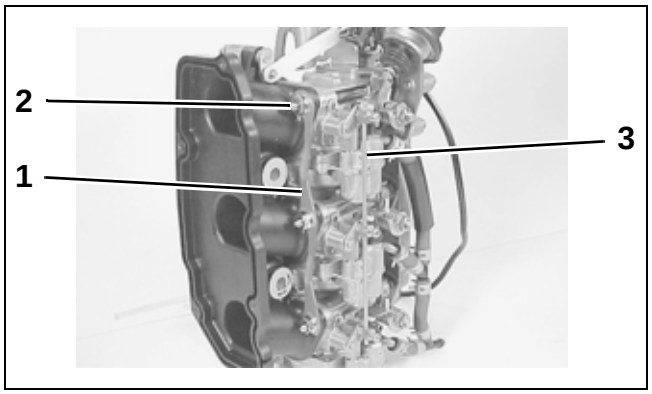

1. *Flange nuts (6)* 001616
2. *Plates*
3. *Choke rod*

Disassembly

When disassembling the carburetor, refer to the following figure. Remove the indicated parts.

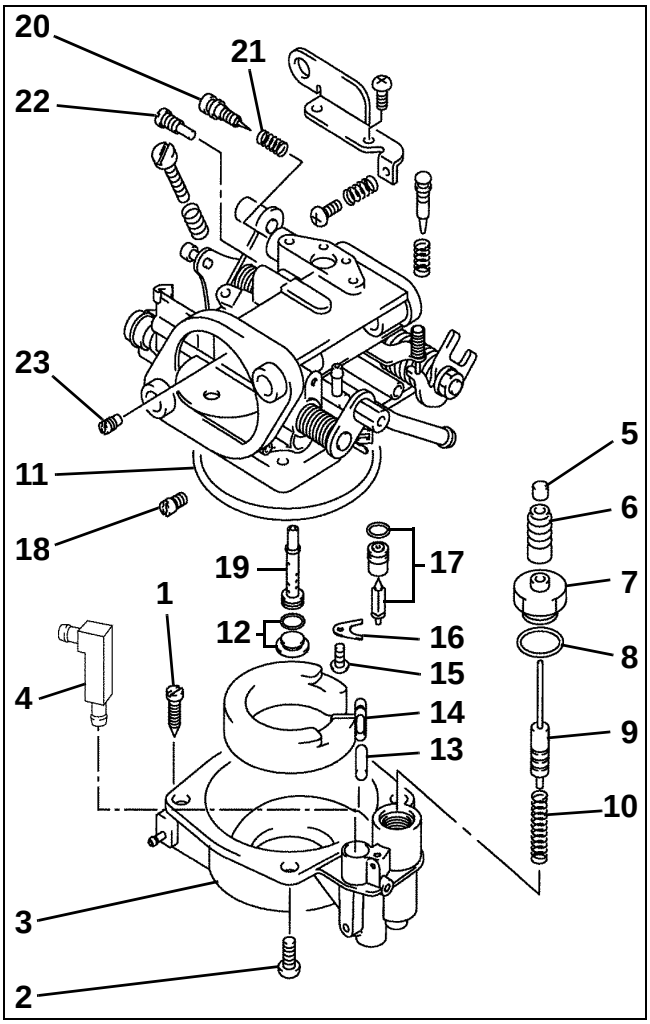

1. *Drain screw* 001620
2. *Screw*
3. *Float chamber*
4. *Tube*
5. *End cap*
6. *Cap*
7. *Holder*
8. *O-ring*
9. *Plunger*
10. *Spring*
11. *Float chamber gasket*
12. *Main nozzle cap and O-ring*
13. *Float pin*
14. *Float*
15. *Screw*
16. *Plate*
17. *Needle valve assembly*
18. *Main jet*
19. *Main nozzle*
20. *Pilot screw*
21. *Spring*
22. *Pilot jet*
23. *Main air jet*

IMPORTANT: For carburetors with pilot screw covers, DO NOT remove the cover and the pilot screw.

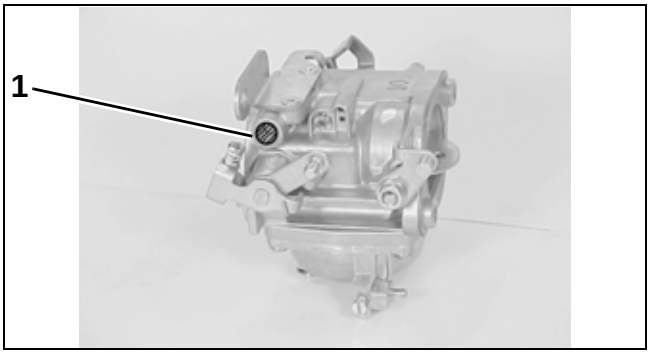

1. Pilot screw cover 001621

Cleaning and Inspection

Before inspection, all carburetor components must be thoroughly cleaned.

IMPORTANT: Never clean a carburetor by submerging or soaking it in a hot tank or carburetor cleaner. Do not expose plastic or rubber parts to any carburetor cleaner.

- Carburetor must be completely disassembled.
- Clean parts with *Carburetor and Choke Cleaner.*
- Use a clean bristle brush to remove gum or varnish deposits.

⚠ WARNING ⚠

To avoid personal injury, wear eye protection and set compressed air pressure to less than 25 psi (172 kPa).

- Blow dry with shop air. When drying passages, direct the flow of shop air opposite to the direction of fuel flow.

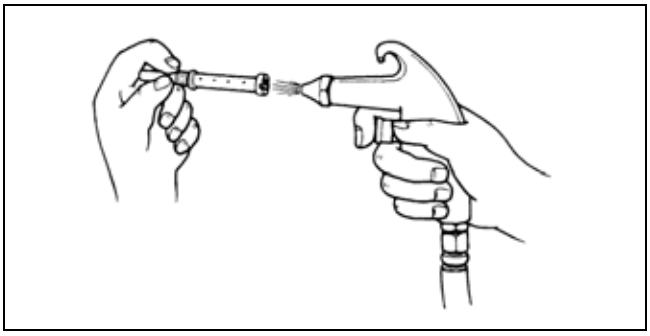

001622

IMPORTANT: DO NOT use wire or small drill bits to clean the carburetor orifices and jet.

Carburetor Body

Check all drillings and passages with a syringe filled with isopropyl alcohol.

Inspect the carburetor body for cracks or other damage. Inspect all gasket surfaces for nicks or irregularities.

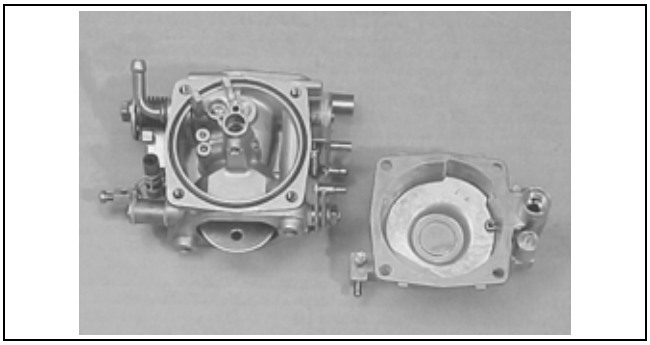

001623

Needle Valves

Inspect the tapered end of the needle valve for nicks, scratches, grooves, or signs of distortion.

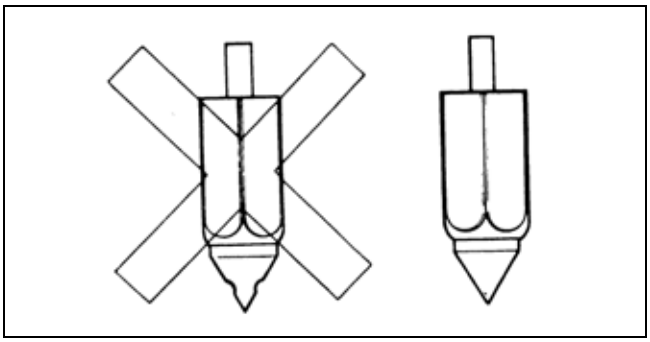

001626

Jet and Nozzle

Inspect the jet and nozzle for obstructions, cracks, and other damage.

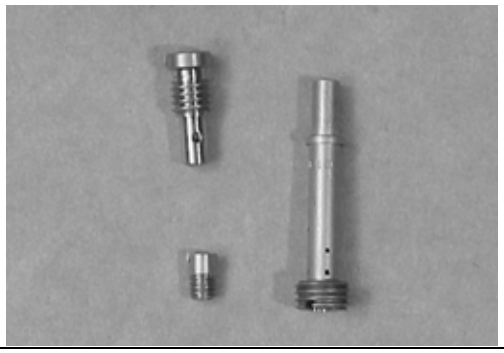

001625

Float

Inspect the float for cracks or other damage.

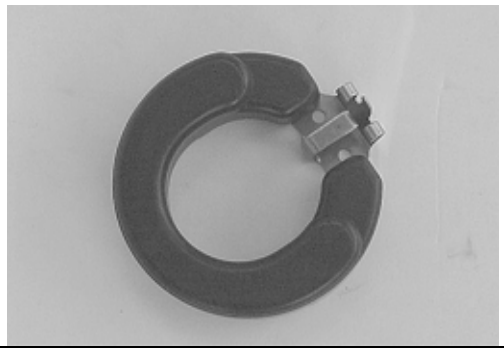

001627

Pilot Screw (for applicable carburetor only)

Inspect pilot screws for wear, damaged threads, broken tips.

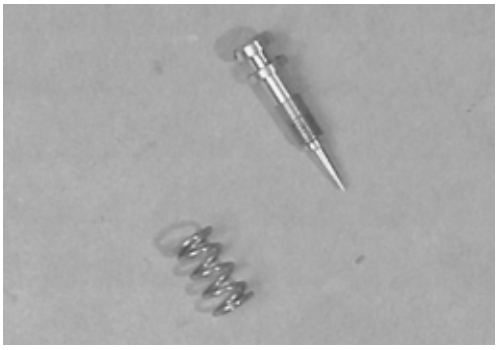

001624

Assembly

When installing new parts from a carburetor rebuild kit, inspect gaskets and compare to original gaskets to ensure all holes are correctly punched. Also, inspect new gaskets for any loose fibers or particles of gasket material.

IMPORTANT: Before proceeding, make sure that all parts are clean. Make sure that all replacement parts match the original ones in size and shape. Replace all gaskets, O-rings, and sealing washers each time you assemble a carburetor.

Refer to the figure in the **Disassembly** procedure for proper assembly of the carburetor.

Checking the Float

Check for correct positioning and smooth movement of the float. The float controls the height of the fuel in the float chamber and is essential to carburetor calibration and function.

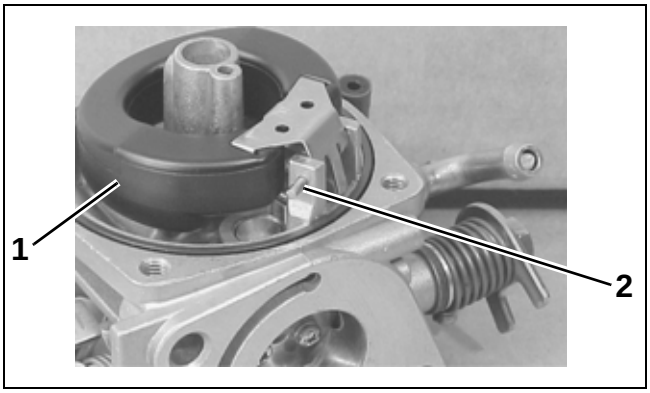

1. Float
2. Float pin

001629

Use vernier calipers to measure the height of the float. The float height should be 0.535 to 0.615 in. (13.6 to 15.6 mm).

IMPORTANT: Make sure that the weight of the float is not applied to the needle valve.

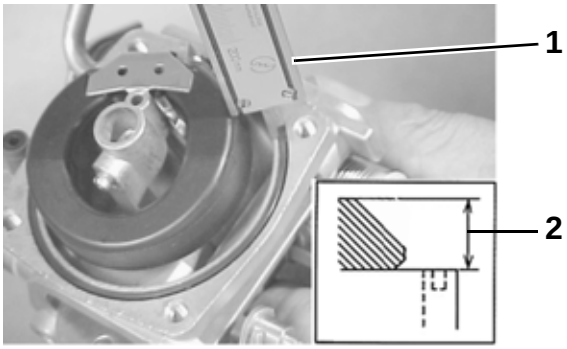

1. Vernier calipers 001630
2. Float height

If the float height is not correct, lightly bend the adjustment tab to adjust the height of the float. Be careful not to force the float needle valve into the seat.

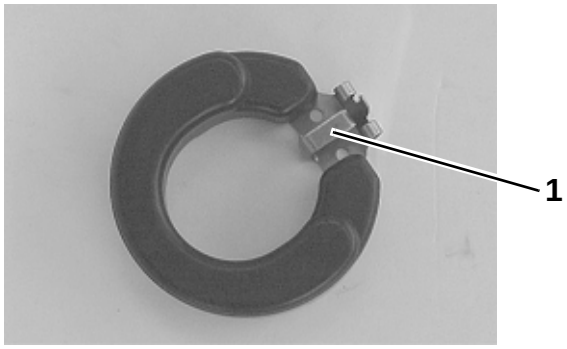

1. Adjustment tab 001627

Adjusting the Accelerator Pump Lever Gap

IMPORTANT: In normal use, adjustment of the accelerator pump lever is unnecessary. It has been adjusted at factory.

Adjust the gap between the accelerator pump lever and the pump plunger rod by turning the adjusting screw.

When the throttle valve is fully closed, there should be no gap.

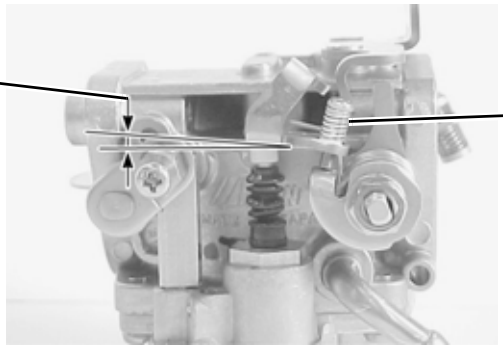

1. Adjusting screw 001631
2. Gap

Installation

CAUTION

Do not reuse gaskets. The sealing ability of used gaskets is insufficient. Air leakage will induce a lean air/fuel mix which will result in severe engine damage.

Install **new** carburetor gaskets, the insulators, the carburetors, the air silencer pipe, and the plates on the inlet case.

Install and tighten the carburetor flange nuts to a torque of 7 ft. lbs. (10 N·m).

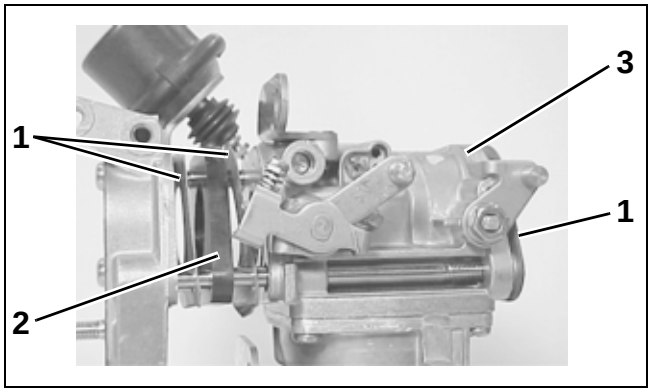

1. Gaskets 001617
2. Insulator
3. Carburetor

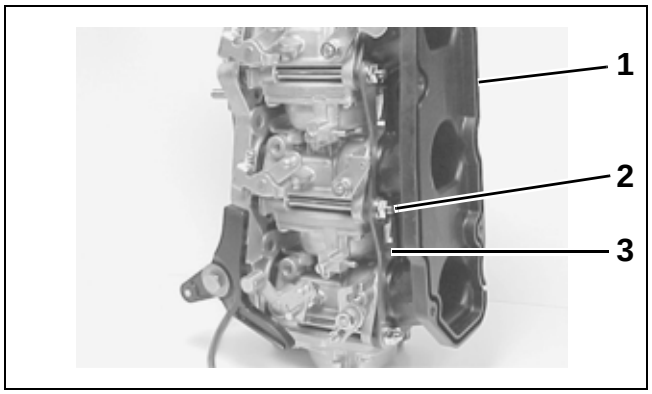

1. Air silencer pipe 001618
2. Flange nuts (6)
3. Plate

Install the choke solenoid (TEL models only) or the carburetor protector (tiller handle model only). Install and tighten the bolts securely.

Install the choke rods and the throttle link rods on each carburetor.

Install the air silencer case and four (4) screws.

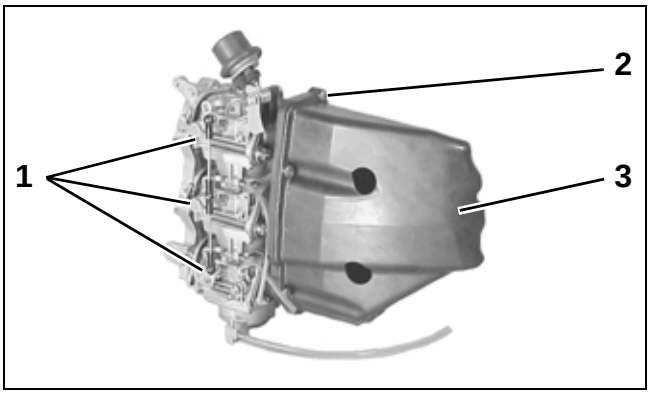

1. Carburetors (3) 001614
2. Screws (4)
3. Air silencer case

Install the fuel inlet hose on the bottom 3-way joint.

Install the carburetor/inlet case assembly to the intake manifold. Install and tighten four (4) bolts and two (2) nuts to a torque of 8 ft. lbs. (11 N·m).

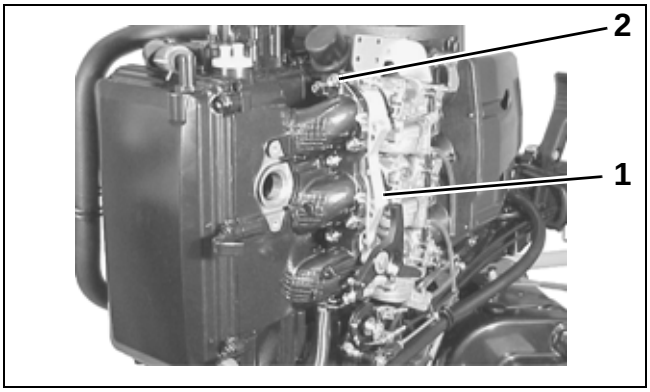

1. Inlet case assembly 001613
2. Bolts (4)

Install the fuel pump. Refer to “FUEL PUMP” on page 111.

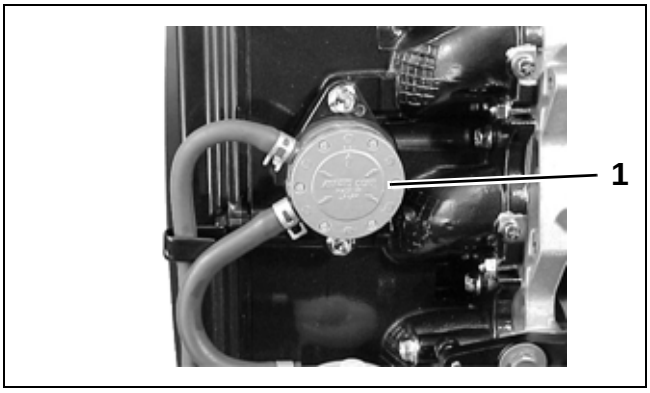

1. Fuel pump 001635

Install the fuel filter bracket and the bolt.

Install the throttle control rod on the throttle cam.

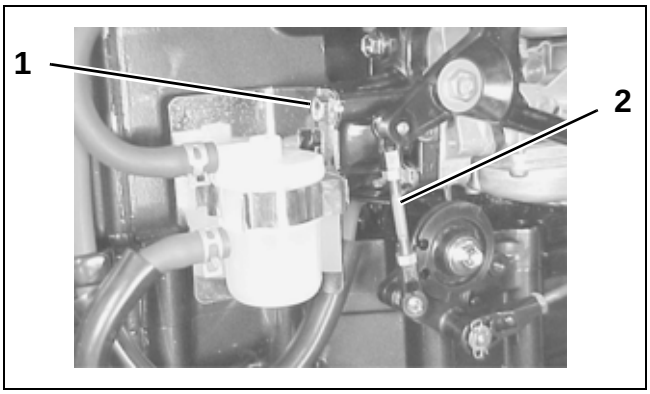

1. Fuel filter bracket bolt 001612
2. Throttle link rod

Install the choke rod and the E-ring on the bottom carburetor (tiller handle model only).

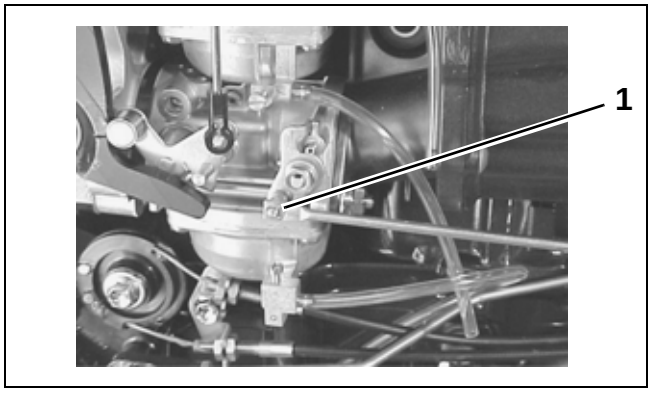

1. Choke rod 001611

Install and tighten two (2) bolts that secure the air silencer pipe to the crankcase.

Install and tighten two (2) bolts that secure the silencer case.

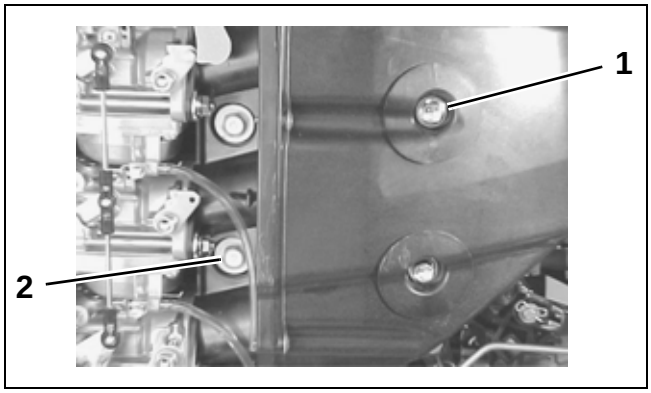

1. Air silencer case bolts (2) 001610
2. Air silencer pipe bolts (2)

Check the carburetor synchronization. Refer to “Synchronizing the Carburetor Throttle Valves” on page 56.

WARNING

After servicing the fuel system, check for leaks. Failure to check for fuel leakage could allow a leak to go undetected, resulting in fire or explosion.

THROTTLE CONTROL

Throttle Linkage Adjustments

When replacing a throttle linkage rod or a connector, refer to the following figures to adjust the length of the rod to the correct specification.

Make sure that an equal length of rod is threaded into each connector. Tighten the lock nut against the connector after adjusting the rod length.

Tiller Handle Models

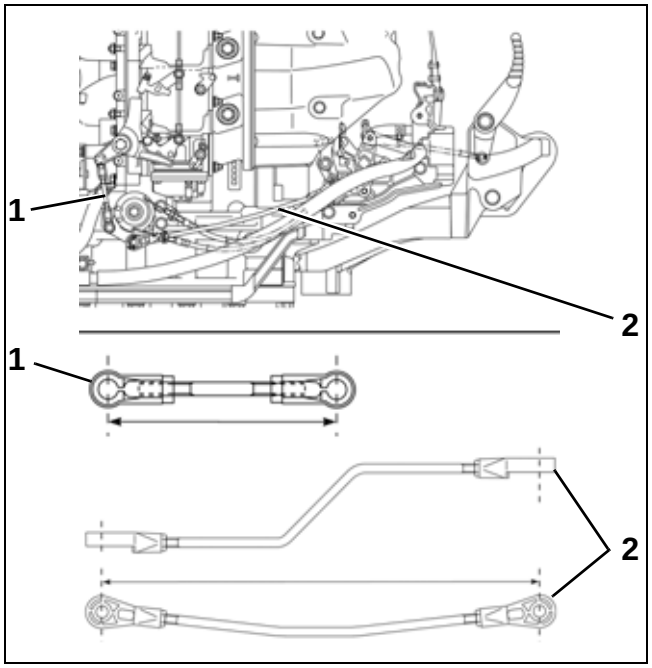

1. Throttle lever rod 001632
2. Throttle limiter rod

Rod Length Specifications	
Throttle lever rod	3.19 in. (81 mm)
Throttle limiter rod	9.47 in. (240.5 mm)

Remote Control Models

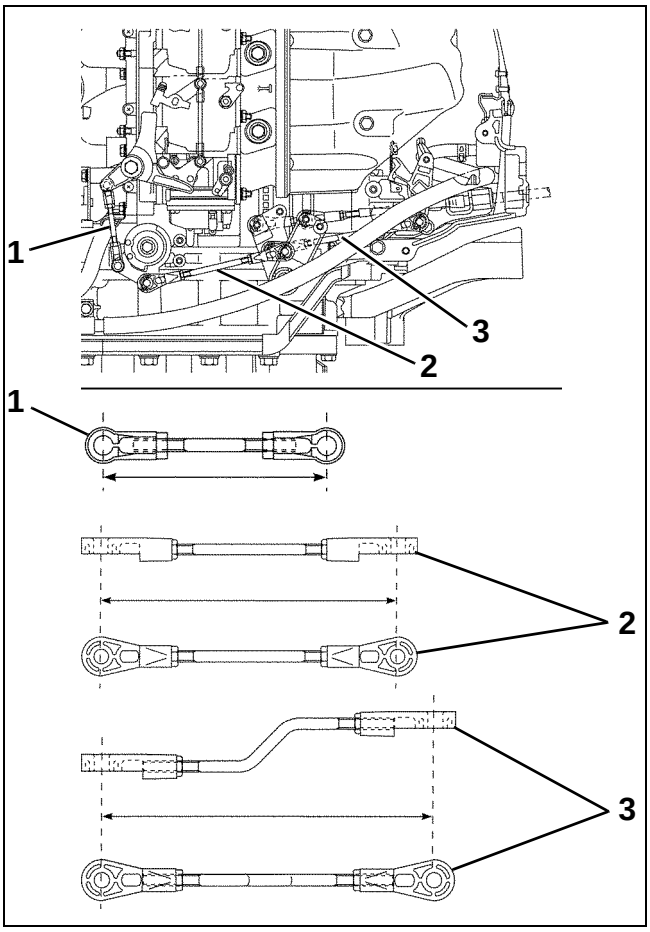

1. Throttle lever rod 001633
2. Throttle control rod
3. Shift rod

Rod Length Specifications	
Throttle lever rod	3.19 in. (81 mm)
Throttle control rod	5.51 in. (140 mm)
Shift rod	5.87 in. (149 mm)

Throttle Cable Installation and Adjustment

Rotate throttle control handle to fully close the throttle.

Align the match mark on the throttle cam with the center of the throttle lever roller. Hold this position.

Install the throttle cables to the throttle drum and the cable holder.

Turn the locknuts in the appropriate direction to install the inner cable with no sag. Tighten the locknuts to secure the throttle cable to the cable bracket.

Rotate the throttle control handle several times from fully closed to fully open.

With the throttle fully closed, make sure that the match mark on the throttle cam is aligned with the center of the throttle lever roller.

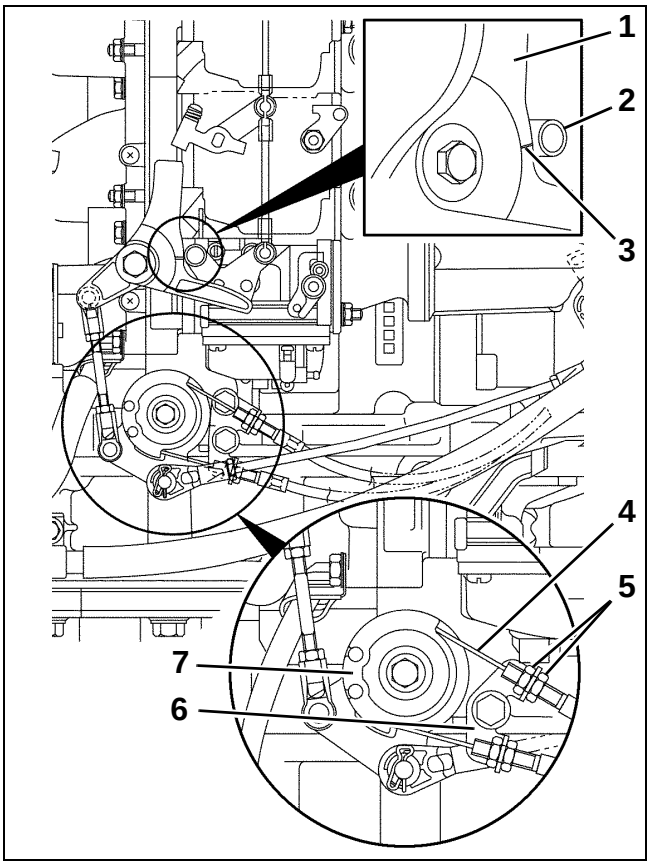

001634

1. *Throttle cam*
2. *Throttle lever roller*
3. *Match mark*
4. *Throttle cable*
5. *Locknuts*
6. *Cable holder*
7. *Throttle drum*

FUEL PUMP

IMPORTANT: Before replacing a suspect fuel pump, remove and clean the fuel filter and install a new filter element. Also, remove the fuel hose from the fuel tank and blow low-pressure compressed air through all passages and hoses to be sure they are open. This might be the cause of inadequate fuel delivery.

Removal

Disconnect the inlet hose and the outlet hose from the fuel pump.

Remove two (2) bolts.

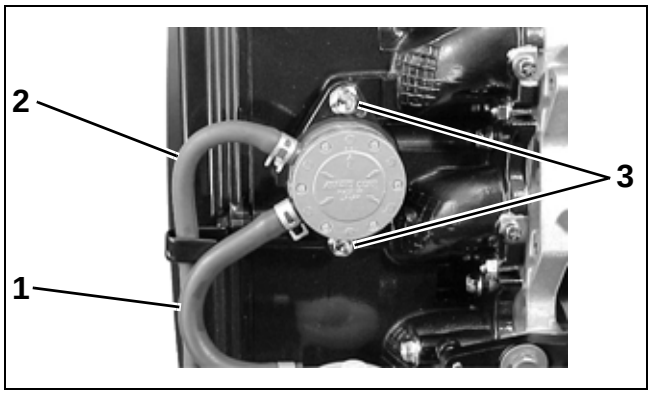

1. Inlet hose
2. Outlet hose
3. Bolts (2)

001635

Remove the fuel pump and the O-ring. Note the position of the pump rod before removal.

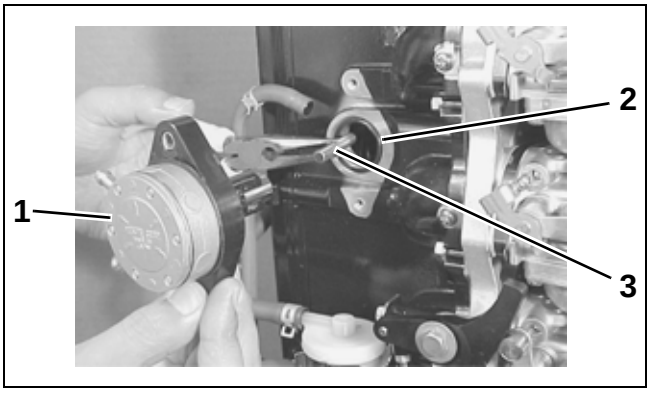

1. Fuel pump
2. O-ring
3. Pump rod

001636

Disassembly

IMPORTANT: For correct assembly, scribe an alignment mark across each part of fuel pump.

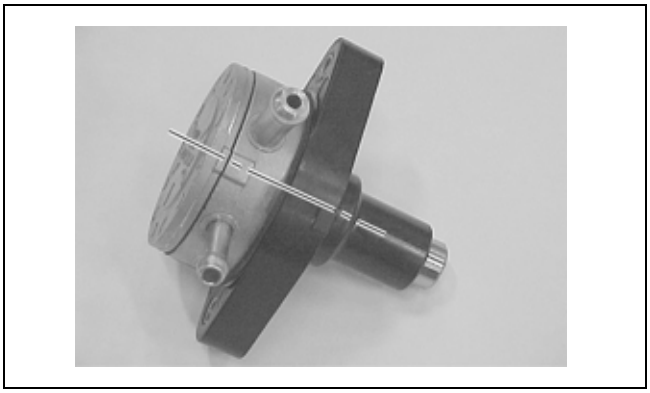

001638

Remove six (6) screws, the outer plate, the diaphragm, and the valve body.

Turn the piston until the pin comes out through the cutaway of the pump body. Remove the pin, the piston, the diaphragm rod, and the two springs.

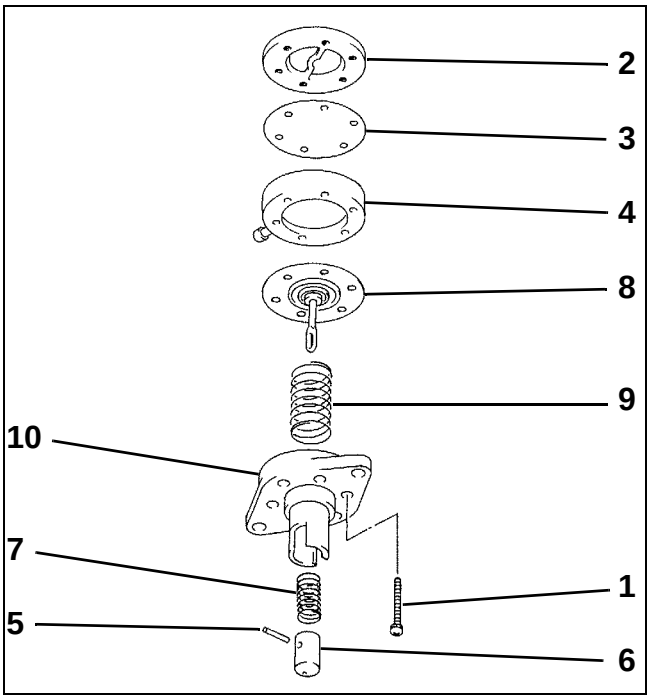

1. *Screws (6)* 001639
2. *Outer plate*
3. *Diaphragm*
4. *Valve body*
5. *Pin*
6. *Piston*
7. *Spring*
8. *Diaphragm rod*
9. *Spring*
10. *Pump body*

Inspection

Inspect the diaphragm and the diaphragm rod for distortions, tears, or other damage.

Inspect the fuel pump body and outer plate for cracks, nicks, distortion, or other damage.

Inspect the check valves in the valve body for damage.

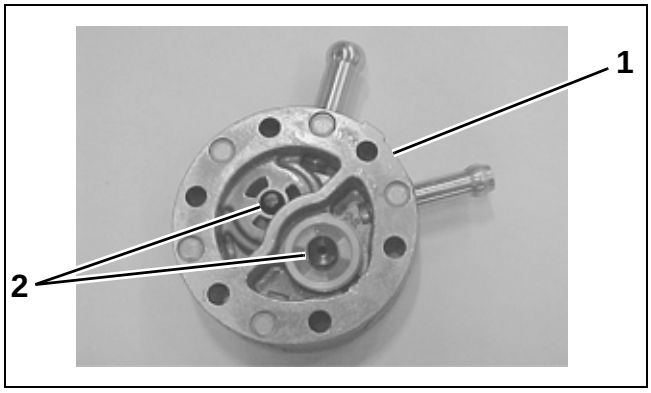

1. *Valve body* 001640
2. *Check valves*

Assembly

Install the two springs, the diaphragm rod, and the piston in the pump body. Connect the diaphragm rod to the piston with the pin.

After connecting the diaphragm rod to the piston, align the six bolt holes in the diaphragm rod with the bolt holes in the pump body by turning the piston and diaphragm rod together. This prevents the pin from coming out through the cutaway in the pump body.

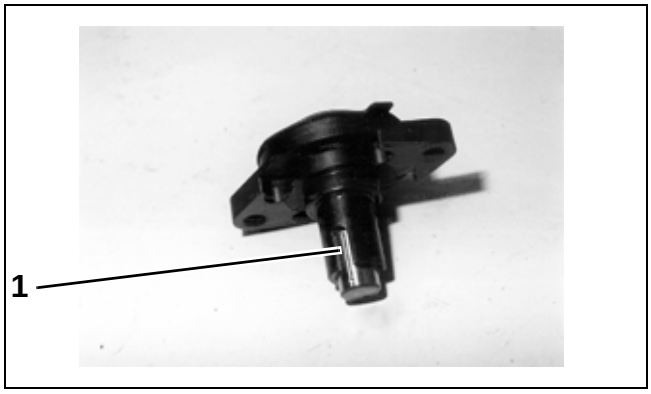

1. *Cutaway in pump body* 001640

Install the valve body, the diaphragm, and the outer plate in the pump body. Make sure that the alignment marks across the components line up. Secure the outer plate with six (6) screws.

Installation

Rotate the crankshaft until the top cylinder piston is at TDC on the compression stroke.

Install the pump rod, a **new** O-ring, and the fuel pump. Install and tighten two (2) bolts to a torque of 7 ft. lbs. (10 N·m).

Connect the inlet hose and the outlet hose to the fuel pump. Tighten the hose clamps securely.

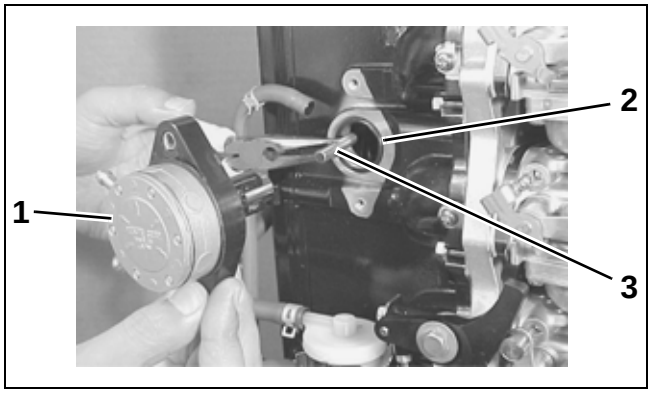

1. Fuel pump
2. O-ring
3. Pump rod

001636

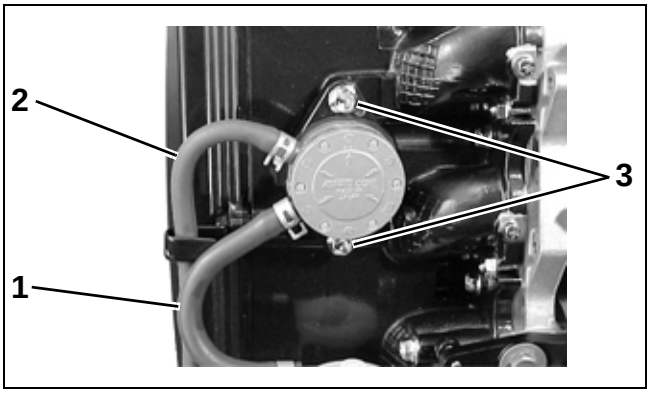

1. Inlet hose
2. Outlet hose
3. Bolts (2)

001635

6

OPERATION

Carburetor

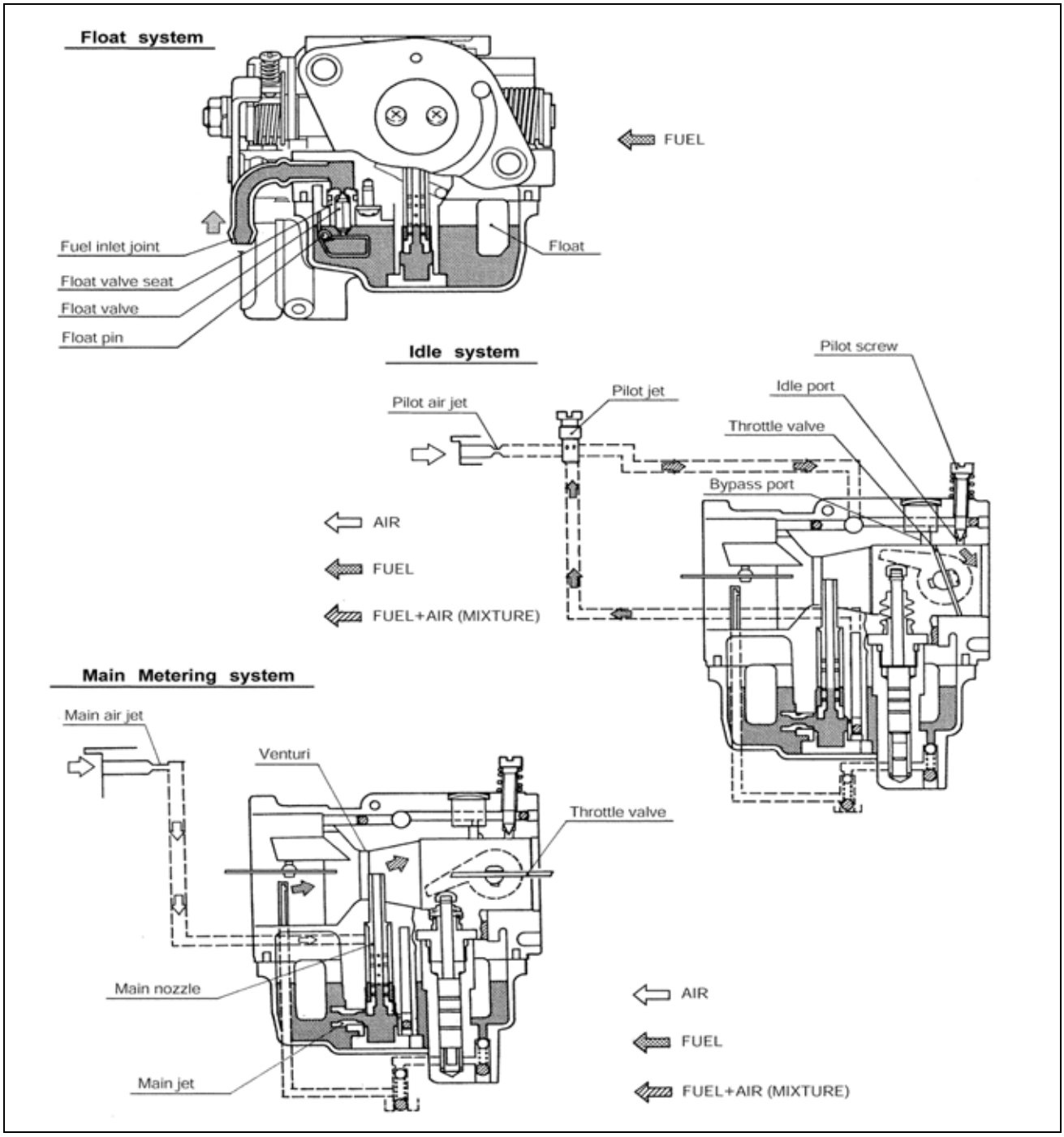

001650

Accelerator Pump System

The 30 HP models are equipped with an accelerator pump system. This system consists of an accelerator pump on each carburetor with brass tubes connecting the pump to the fuel output nozzles on each carburetor.

A normal engine characteristic during hard acceleration is hesitation caused by an imbalance in the fuel/air ratio. This is due to the rapid rate of increase in intake air volume when the throttle is opened quickly with the air velocity and fuel flow rate following at a slower rate of increase. The accelerator pump system overcomes this characteristic.

The accelerator pump system's function is to provide a balanced fuel/air ratio during acceleration only by adding a specific volume of fuel to enrichen the mixture. When the throttle is opened, the accelerator pump lever pushes down on the pump rod and plunger. As the plunger pushes against the fuel, the check ball in the inlet passage closes. Fuel is pushed out of the pump body through the brass tube and outlet nozzle, spraying into carburetor bore.

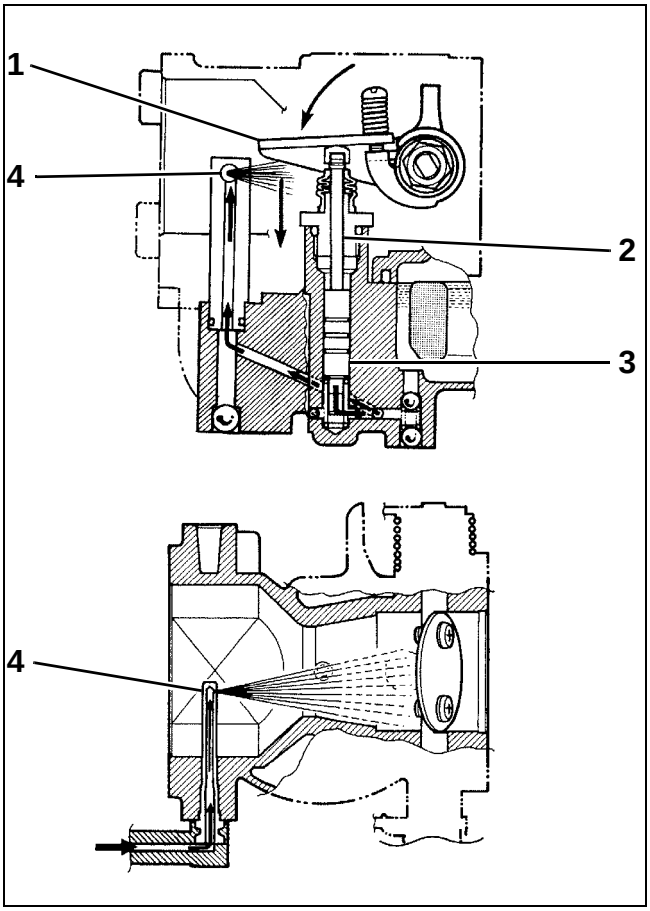

001651

1. *Pump lever*
2. *Pump rod*
3. *Plunger*
4. *Outlet nozzle*

NOTES

Technician's Notes

Related Documents

Bulletins	
Instruction Sheets	
Other	